Any unauthorized use of this drawing, copying or passing on to third parties requires the explicit approval of ebm-papst Mulfingen GmbH & Co. KG
Any violations of this shall be prosecuted in Civic and Penal Court!

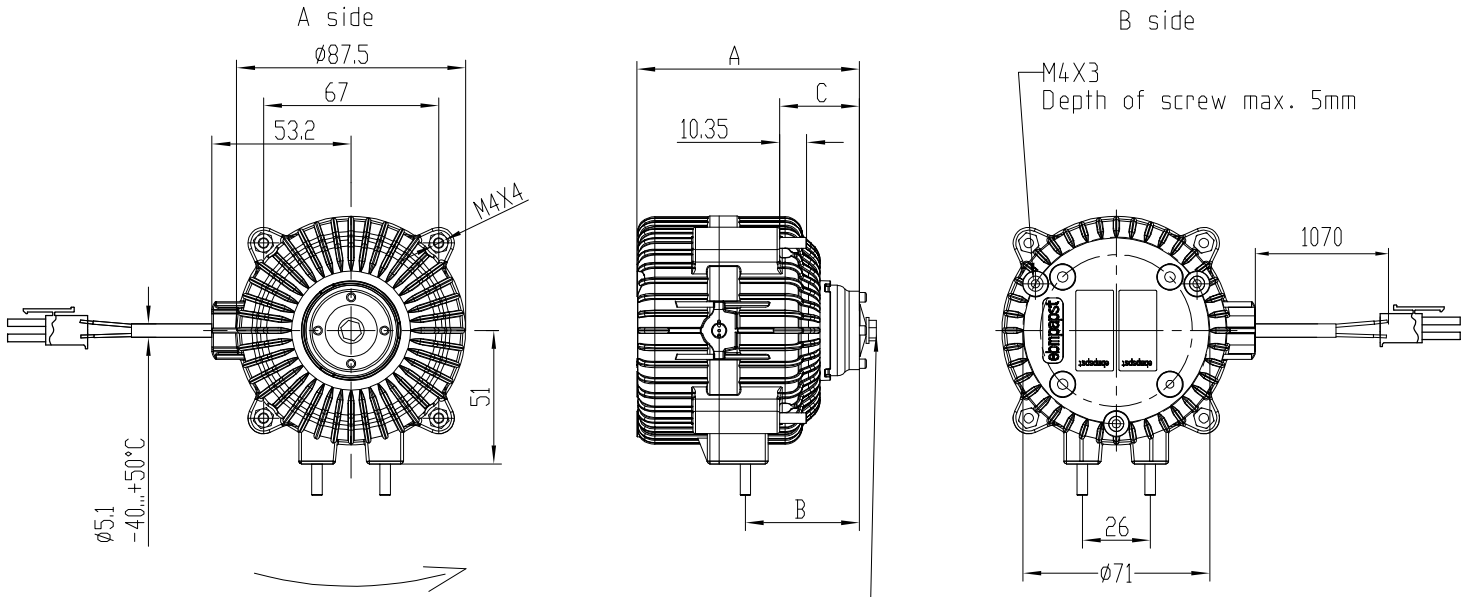

plastic housing:MOLEX-39012045
1 Brown, 3 Blue
pin:Molex 39000038

Tolerances ISO 2768 -mK -E	ebmpapst							
	ebm-papst Ventilator (ShangHai) CO.,Ltd							
Scale 1:1							Fit	Deviations
Size		Date	Name					
		Designed						
Distribution		Checked						
		CAD: IQC3612-040112-A07		Ind.	KM-Nr.	Date	Name	Sheet 1 of 1

Paper size: A3