General Characteristics

Model number (on compressor nameplate)		**NTZ136A4LR1B**
Code number for Singlepack*		120F0236
Code number for Industrial pack**		120F0237
Drawing number		8502012g
Suction and discharge connections		Rotolock
Suction connection		1-3/4 " Rotolock
Discharge connection		1-1/4 " Rotolock
Suction connection with supplied sleeve		1-1/8 " ODF
Discharge connection with supplied sleeve		3/4 " ODF
Oil sight glass		Threaded
Oil equalisation connection		3/8" flare SAE
Oil drain connection		None
LP gauge port		Schrader
IPR valve		30 bar / 8 bar
Cylinders	2	
Swept volume	136 cm3/rev	
Displacement @ Nominal speed	23.7 m3/h @ 2900 rpm - 28.6 m3/h @ 3500 rpm	
Net weight	35 kg	
Oil charge	1.8 litre, POE - 175PZ	
Maximum system test pressure Low Side / High side	25 bar(g) / 30 bar(g)	
Maximum differential test pressure	30 bar	
Maximum number of starts per hour	12	
Refrigerant charge limit	5 kg	
Approved refrigerants	R404A, R452A	

Dimensions

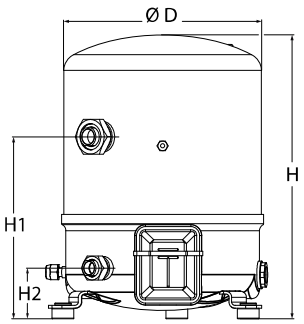

D=288 mm
H=413 mm
H1=265 mm
H2=74 mm
H3=- mm

Terminal box

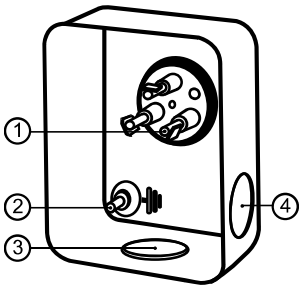

IP55 (with cable gland)
1: Spade connectors 1/4"
2: Earth M4-12
3: Knock-out Ø 21 mm (0.83")
4: Hole Ø 21 mm (0.83")

Electrical Characteristics

Nominal voltage	380-400V/3/50Hz - 460V/3/60Hz
Voltage range	340-440 V @ 50Hz - 414-506 V @ 60Hz
Winding resistance (between phases) +/- 7% at 25°C	3.8 Ω
Maximum Continuous Current (MCC)	14.3 A
Locked Rotor Amps (LRA)	51 A
Motor protection	Internal overload protector

Recommended Installation torques

Oil sight glass	50 Nm
Power connections / Earth connection	2 Nm / 2 Nm
Mounting bolts	15 Nm

Parts shipped with compressor

Mounting kit with grommets, bolts, nuts, sleeves and washers
Suction & Discharge solder sleeves, rotolock nuts and gaskets (shipped with rotolock version only)
Initial oil charge
Installation instructions

Approvals : CE certified, -, -

*Singlepack: Compressor in cardboard box

**Industrial pack: 6 Unboxed compressors on pallet (order per multiples of 6)

Danfoss can accept no responsibility for possible errors in catalogues, brochures and other printed material. Danfoss reserves the right to alter its products without notice.
This also applies to products already on order provided that such alternations can be made without subsequential changes being necessary in specifications already agreed.
All trademarks in this material are property of the respective companies. Danfoss, the Danfoss logotype and Maneurop are trademarks of Danfoss A/S. All rights reserved.

Rotolock accessories, suction side	Code no.
Solder sleeve, P02 (1-3/4" Rotolock, 1-1/8" ODF)	8153004
Angle adapter, C02 (1-3/4" Rotolock, 1-1/8" ODF)	8168005
Rotolock valve, V02 (1-3/4" Rotolock, 1-1/8" ODF)	8168028
Gasket, 1-3/4"	8156132

Rotolock accessories, discharge side	Code no.
Solder sleeve, P04 (1-1/4" Rotolock, 3/4" ODF)	8153008
Angle adapter, C04 (1-1/4" Rotolock, 3/4" ODF)	8168006
Rotolock valve, V04 (1-1/4" Rotolock, 3/4" ODF)	8168029
Gasket, 1-1/4"	8156131

Rotolock accessories, sets	Code no.
Angle adapter set, C02 (1-3/4"~1-1/8"), C04 (1-1/4"~3/4")	7703014
Valve set, V02 (1-3/4"~1-1/8"), V04 (1-1/4"~3/4")	7703009
Gasket set, 1", 1-1/4", 1-3/4", OSG gaskets black & white	8156009

Oil / lubricants	Code no.
POE lubricant, 175PZ, 1 litre can	120Z0638
POE lubricant, 175PZ, 2.5 litre can	120Z0639

Crankcase heaters	Code no.
PTC heater 27W,CE mark, UL	120Z0459
Belt type crankcase heater, 65 W, 230 V, CE mark, UL	7773107
Belt type crankcase heater, 65 W, 400 V, CE mark, UL	7773117
Belt type crankcase heater, 65 W, 460 V, CE mark, UL	120Z0466

Miscellaneous accessories	Code no.
Acoustic hood for 2 cylinder compressor	120Z0472
Oil equalisation nut	8153127

Spare parts	Code no.
Mounting kit for 1 and 2 cylinder compressor, including 3 grommets, 3 bolts	8156001
Oil sight glass with gaskets (black & white)	8156019
Gasket for oil sight glass (black chloroprene)	8156145
Service kit for terminal box 80 x 96 mm, including 1 cover, 1 clamp	8156134

Gaskets, sleeves and nuts

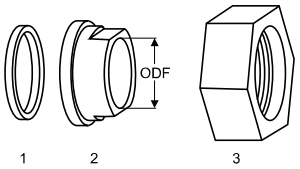

1: Gasket
2: Solder sleeve
3: Rotolock nut

Mounting kit

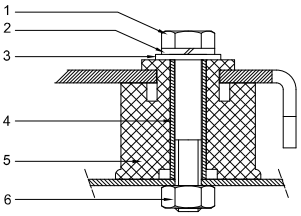

1: Bolt (3x)
2: Lock washer (3x)
3: Flat washer (3x)
4: Sleeve (3x)
5: Grommet (3x)
6: Nut (3x)

Danfoss can accept no responsibility for possible errors in catalogues, brochures and other printed material. Danfoss reserves the right to alter its products without notice.
This also applies to products already on order provided that such alternations can be made without subsequential changes being necessary in specifications already agreed.
All trademarks in this material are property of the respective companies. Danfoss, the Danfoss logotype and Maneurop are trademarks of Danfoss A/S. All rights reserved.

Performance data at 50 Hz, EN 12900 rating conditions, Suction temp. = 20 °C

R452A

Cond. temp. in °C (tc)	Evaporating temperature in °C (to)								
	-45	-40	-35	-30	-25	-20	-15	-10	
Cooling capacity in W									
30	-	-	4 184	5 610	7 356	9 455	11 937	14 836	-
35	-	-	3 753	5 048	6 639	8 556	10 831	13 497	-
40	-	-	3 350	4 518	5 956	7 695	9 768	12 205	-
45	-	-	-	4 017	5 306	6 871	8 744	10 955	-
50	-	-	-	-	4 685	6 080	7 756	9 746	-
55	-	-	-	-	-	5 318	6 803	8 575	-
60	-	-	-	-	-	-	-	-	-
Power input in W									
30	-	-	2 704	3 126	3 559	4 005	4 468	4 951	-
35	-	-	2 742	3 195	3 660	4 138	4 634	5 150	-
40	-	-	2 775	3 265	3 766	4 282	4 816	5 371	-
45	-	-	-	3 323	3 866	4 425	5 003	5 602	-
50	-	-	-	-	3 951	4 558	5 184	5 832	-
55	-	-	-	-	-	4 668	5 348	6 050	-
60	-	-	-	-	-	-	-	-	-
Current consumption in A									
30	-	-	5.92	6.28	6.71	7.20	7.74	8.33	-
35	-	-	6.07	6.50	7.00	7.55	8.16	8.80	-
40	-	-	6.11	6.62	7.20	7.82	8.49	9.20	-
45	-	-	-	6.66	7.32	8.02	8.77	9.54	-
50	-	-	-	-	7.37	8.17	9.00	9.85	-
55	-	-	-	-	-	8.28	9.20	10.14	-
60	-	-	-	-	-	-	-	-	-
Mass flow in kg/h									
30	-	-	101	135	178	230	293	367	-
35	-	-	95	128	169	219	280	351	-
40	-	-	90	121	161	209	267	336	-
45	-	-	-	115	152	198	254	321	-
50	-	-	-	-	144	188	242	307	-
55	-	-	-	-	-	179	230	292	-
60	-	-	-	-	-	-	-	-	-
Coefficient of performance (C.O.P.)									
30	-	-	1.55	1.79	2.07	2.36	2.67	3.00	-
35	-	-	1.37	1.58	1.81	2.07	2.34	2.62	-
40	-	-	1.21	1.38	1.58	1.80	2.03	2.27	-
45	-	-	-	1.21	1.37	1.55	1.75	1.96	-
50	-	-	-	-	1.19	1.33	1.50	1.67	-
55	-	-	-	-	-	1.14	1.27	1.42	-
60	-	-	-	-	-	-	-	-	-

Nominal performance at to = -35 °C, tc = 40 °C

Cooling capacity	3 350	W
Power input	2 775	W
Current consumption	6.11	A
Mass flow	90	kg/h
C.O.P.	1.21	

Pressure switch settings

Maximum HP switch setting	27.7	bar(g)
Minimum LP switch setting	0.1	bar(g)
LP pump down setting	0.1	bar(g)

Sound power data

Sound power level	dB(A)
With accoustic hood	dB(A)

to: Evaporating temperature at dew point
tc: Condensing temperature at dew point
Rating conditions : Suction gas temp. = 20 °C , Subcooling = 0 K

Tolerance according EN12900

Danfoss can accept no responsibility for possible errors in catalogues, brochures and other printed material. Danfoss reserves the right to alter its products without notice.
This also applies to products already on order provided that such alternations can be made without subsequential changes being necessary in specifications already agreed.
All trademarks in this material are property of the respective companies. Danfoss, the Danfoss logotype and Maneurop are trademarks of Danfoss A/S. All rights reserved.

Performance data at 50 Hz, EN 12900 rating conditions, Superheat = 10 K

R452A

Cond. temp. in °C (tc)	Evaporating temperature in °C (to)								
	-45	-40	-35	-30	-25	-20	-15	-10	
Cooling capacity in W									
30	-	2 755	3 829	5 195	6 892	8 959	11 435	14 360	-
35	-	2 413	3 376	4 605	6 139	8 017	10 280	12 968	-
40	-	2 098	2 954	4 050	5 425	7 119	9 172	11 625	-
45	-	-	2 559	3 527	4 747	6 260	8 106	10 330	-
50	-	-	-	3 031	4 101	5 437	7 081	9 077	-
55	-	-	-	2 560	3 483	4 646	6 091	7 864	-
60	-	-	-	-	-	-	-	-	-
Power input in W									
30	-	2 290	2 704	3 126	3 559	4 005	4 468	4 951	-
35	-	2 297	2 742	3 195	3 660	4 138	4 634	5 150	-
40	-	2 294	2 775	3 265	3 766	4 282	4 816	5 371	-
45	-	-	2 792	3 323	3 866	4 425	5 003	5 602	-
50	-	-	-	3 359	3 951	4 558	5 184	5 832	-
55	-	-	-	3 363	4 007	4 668	5 348	6 050	-
60	-	-	-	-	-	-	-	-	-
Current consumption in A									
30	-	5.64	5.92	6.28	6.71	7.20	7.74	8.33	-
35	-	5.72	6.07	6.50	7.00	7.55	8.16	8.80	-
40	-	5.67	6.11	6.62	7.20	7.82	8.49	9.20	-
45	-	-	6.06	6.66	7.32	8.02	8.77	9.54	-
50	-	-	-	6.62	7.37	8.17	9.00	9.85	-
55	-	-	-	6.54	7.39	8.28	9.20	10.14	-
60	-	-	-	-	-	-	-	-	-
Mass flow in kg/h									
30	-	90	122	161	208	263	328	403	-
35	-	85	115	152	197	251	314	387	-
40	-	80	108	144	187	239	300	370	-
45	-	-	102	136	177	227	286	354	-
50	-	-	-	128	168	215	272	337	-
55	-	-	-	121	159	204	258	322	-
60	-	-	-	-	-	-	-	-	-
Coefficient of performance (C.O.P.)									
30	-	1.20	1.42	1.66	1.94	2.24	2.56	2.90	-
35	-	1.05	1.23	1.44	1.68	1.94	2.22	2.52	-
40	-	0.91	1.06	1.24	1.44	1.66	1.90	2.16	-
45	-	-	0.92	1.06	1.23	1.41	1.62	1.84	-
50	-	-	-	0.90	1.04	1.19	1.37	1.56	-
55	-	-	-	0.76	0.87	1.00	1.14	1.30	-
60	-	-	-	-	-	-	-	-	-

Nominal performance at to = -35 °C, tc = 40 °C

Cooling capacity	2 954	W
Power input	2 775	W
Current consumption	6.11	A
Mass flow	108	kg/h
C.O.P.	1.06	

to: Evaporating temperature at dew point
tc: Condensing temperature at dew point
Rating conditions : Superheat = 10 K , Subcooling = 0 K

Pressure switch settings

Maximum HP switch setting	27.7	bar(g)
Minimum LP switch setting	0.1	bar(g)
LP pump down setting	0.1	bar(g)

Sound power data

Sound power level	dB(A)
With accoustic hood	dB(A)

Tolerance according EN12900

Danfoss can accept no responsibility for possible errors in catalogues, brochures and other printed material. Danfoss reserves the right to alter its products without notice.
This also applies to products already on order provided that such alternations can be made without subsequential changes being necessary in specifications already agreed.
All trademarks in this material are property of the respective companies. Danfoss, the Danfoss logotype and Maneurop are trademarks of Danfoss A/S. All rights reserved.

Performance data at 50 Hz, EN 12900 rating conditions, Suction temp. = 20 °C

R404A

Cond. temp. in °C (tc)	Evaporating temperature in °C (to)								
	-45	-40	-35	-30	-25	-20	-15	-10	
Cooling capacity in W									
30	-	2 943	4 059	5 425	7 068	9 019	11 303	13 951	-
35	-	-	3 644	4 918	6 452	8 272	10 406	12 884	-
40	-	-	3 225	4 407	5 827	7 514	9 496	11 801	-
45	-	-	-	3 892	5 197	6 748	8 575	10 706	-
50	-	-	-	-	4 564	5 977	7 646	9 599	-
55	-	-	-	-	-	5 204	6 713	8 486	-
60	-	-	-	-	-	4 430	5 776	7 367	-
Power input in W									
30	-	2 400	2 893	3 358	3 787	4 173	4 509	4 788	-
35	-	-	2 911	3 429	3 924	4 390	4 820	5 205	-
40	-	-	2 896	3 461	4 017	4 557	5 073	5 560	-
45	-	-	-	3 468	4 079	4 687	5 285	5 866	-
50	-	-	-	-	4 126	4 796	5 470	6 140	-
55	-	-	-	-	-	4 899	5 642	6 395	-
60	-	-	-	-	-	5 010	5 817	6 647	-
Current consumption in A									
30	-	5.59	6.07	6.59	7.13	7.68	8.24	8.80	-
35	-	-	6.11	6.70	7.32	7.96	8.61	9.25	-
40	-	-	6.10	6.77	7.47	8.20	8.94	9.68	-
45	-	-	-	6.79	7.58	8.40	9.23	10.08	-
50	-	-	-	-	7.65	8.56	9.50	10.45	-
55	-	-	-	-	-	8.69	9.73	10.79	-
60	-	-	-	-	-	8.78	9.94	11.11	-
Mass flow in kg/h									
30	-	71	98	131	172	221	279	348	-
35	-	-	93	126	166	214	272	339	-
40	-	-	87	120	159	207	263	331	-
45	-	-	-	113	152	199	255	321	-
50	-	-	-	-	144	190	245	311	-
55	-	-	-	-	-	181	235	300	-
60	-	-	-	-	-	170	224	288	-
Coefficient of performance (C.O.P.)									
30	-	1.23	1.40	1.62	1.87	2.16	2.51	2.91	-
35	-	-	1.25	1.43	1.64	1.88	2.16	2.48	-
40	-	-	1.11	1.27	1.45	1.65	1.87	2.12	-
45	-	-	-	1.12	1.27	1.44	1.62	1.82	-
50	-	-	-	-	1.11	1.25	1.40	1.56	-
55	-	-	-	-	-	1.06	1.19	1.33	-
60	-	-	-	-	-	0.88	0.99	1.11	-

Nominal performance at to = -35 °C, tc = 40 °C

Cooling capacity	3 225	W
Power input	2 896	W
Current consumption	6.10	A
Mass flow	87	kg/h
C.O.P.	1.11	

CERTIFIED PRODUCT ASERCOM

Pressure switch settings

Maximum HP switch setting	27.7	bar(g)
Minimum LP switch setting	0.1	bar(g)
LP pump down setting	0.1	bar(g)

Sound power data

Sound power level	77.3	dB(A)
With accoustic hood	71.3	dB(A)

to: Evaporating temperature at dew point
tc: Condensing temperature at dew point
Rating conditions : Suction gas temp. = 20 °C , Subcooling = 0 K

Tolerance according EN12900

Danfoss can accept no responsibility for possible errors in catalogues, brochures and other printed material. Danfoss reserves the right to alter its products without notice.
This also applies to products already on order provided that such alternations can be made without subsequential changes being necessary in specifications already agreed.
All trademarks in this material are property of the respective companies. Danfoss, the Danfoss logotype and Maneurop are trademarks of Danfoss A/S. All rights reserved.

Performance data at 50 Hz, EN 12900 rating conditions, Superheat = 10 K

R404A

Cond. temp. in °C (tc)	Evaporating temperature in °C (to)								
	-45	-40	-35	-30	-25	-20	-15	-10	
Cooling capacity in W									
30	1 796	2 617	3 661	4 961	6 552	8 469	10 749	13 426	-
35	1 502	2 261	3 223	4 421	5 891	7 669	9 790	12 293	-
40	-	1 911	2 788	3 882	5 228	6 862	8 823	11 147	-
45	-	1 570	2 359	3 346	4 565	6 053	7 848	9 992	-
50	-	1 243	1 941	2 817	3 905	5 243	6 871	8 828	-
55	-	-	1 536	2 298	3 252	4 437	5 891	7 659	-
60	-	-	-	1 793	2 609	3 635	4 911	6 483	-
Power input in W									
30	1 885	2 400	2 893	3 358	3 787	4 173	4 509	4 788	-
35	1 837	2 378	2 911	3 429	3 924	4 390	4 820	5 205	-
40	-	2 329	2 896	3 461	4 017	4 557	5 073	5 560	-
45	-	2 268	2 862	3 468	4 079	4 687	5 285	5 866	-
50	-	2 209	2 825	3 467	4 126	4 796	5 470	6 140	-
55	-	-	2 800	3 471	4 173	4 899	5 642	6 395	-
60	-	-	-	3 495	4 234	5 010	5 817	6 647	-
Current consumption in A									
30	5.15	5.59	6.07	6.59	7.13	7.68	8.24	8.80	-
35	5.05	5.56	6.11	6.70	7.32	7.96	8.61	9.25	-
40	-	5.47	6.10	6.77	7.47	8.20	8.94	9.68	-
45	-	5.32	6.03	6.79	7.58	8.40	9.23	10.08	-
50	-	5.11	5.91	6.76	7.65	8.56	9.50	10.45	-
55	-	-	5.74	6.68	7.67	8.69	9.73	10.79	-
60	-	-	-	6.56	7.65	8.78	9.94	11.11	-
Mass flow in kg/h									
30	62	88	119	156	201	253	314	384	-
35	56	82	113	150	194	246	306	375	-
40	-	75	106	143	186	237	297	365	-
45	-	68	98	134	177	228	287	354	-
50	-	60	90	126	168	218	276	343	-
55	-	-	81	116	158	207	265	331	-
60	-	-	-	106	147	196	252	317	-
Coefficient of performance (C.O.P.)									
30	0.95	1.09	1.27	1.48	1.73	2.03	2.38	2.80	-
35	0.82	0.95	1.11	1.29	1.50	1.75	2.03	2.36	-
40	-	0.82	0.96	1.12	1.30	1.51	1.74	2.01	-
45	-	0.69	0.82	0.96	1.12	1.29	1.49	1.70	-
50	-	0.56	0.69	0.81	0.95	1.09	1.26	1.44	-
55	-	-	0.55	0.66	0.78	0.91	1.04	1.20	-
60	-	-	-	0.51	0.62	0.73	0.84	0.98	-

Nominal performance at to = -35 °C, tc = 40 °C

Cooling capacity	2 788	W
Power input	2 896	W
Current consumption	6.10	A
Mass flow	106	kg/h
C.O.P.	0.96	

to: Evaporating temperature at dew point
tc: Condensing temperature at dew point
Rating conditions : Superheat = 10 K , Subcooling = 0 K

Pressure switch settings

Maximum HP switch setting	27.7	bar(g)
Minimum LP switch setting	0.1	bar(g)
LP pump down setting	0.1	bar(g)

Sound power data

Sound power level	77.3	dB(A)
With accoustic hood	71.3	dB(A)

Tolerance according EN12900

Danfoss can accept no responsibility for possible errors in catalogues, brochures and other printed material. Danfoss reserves the right to alter its products without notice.
This also applies to products already on order provided that such alternations can be made without subsequential changes being necessary in specifications already agreed.
All trademarks in this material are property of the respective companies. Danfoss, the Danfoss logotype and Maneurop are trademarks of Danfoss A/S. All rights reserved.