FILE NO	051322001-4Q

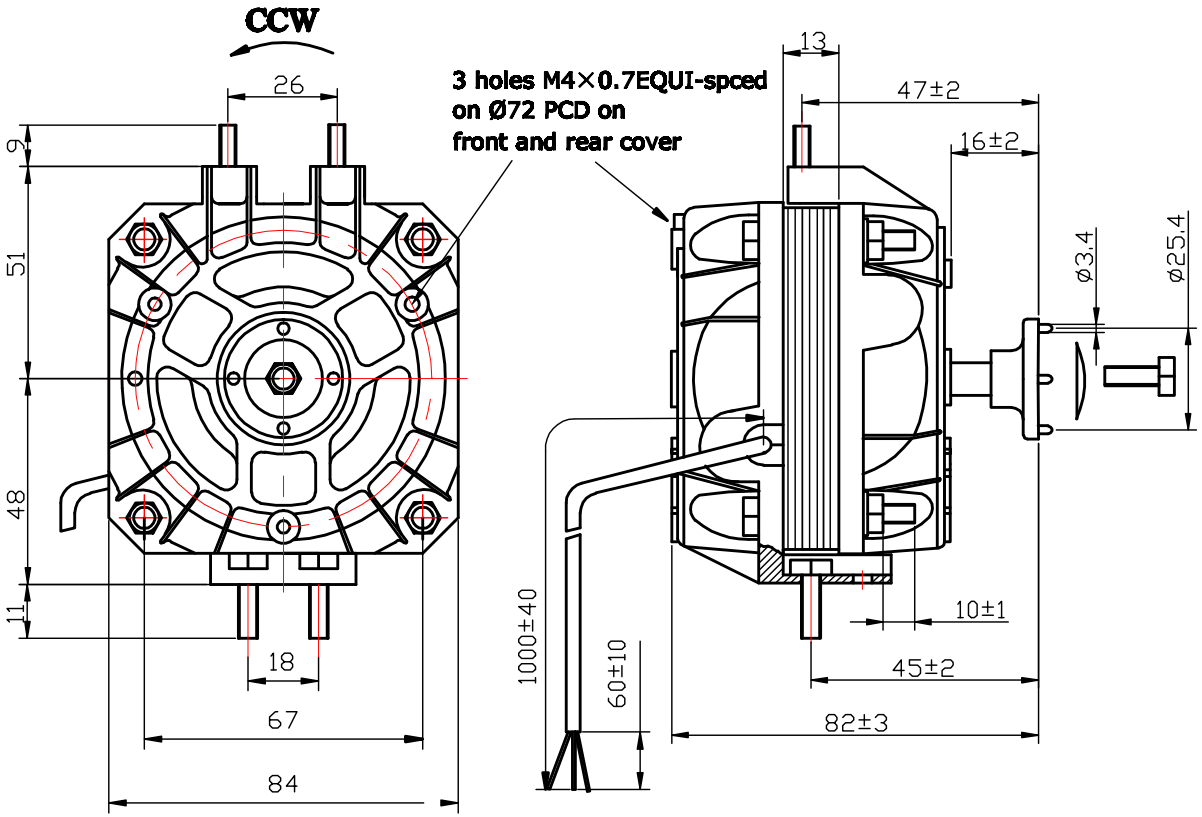

SPECIFICATION

MOTOR	Shaded pole motor		
MOTOR TYPE	YZF5-13 MTF521RF		
VOLTAGE (V)	230		
FREQUENCY (Hz)	50		
INPUT POWER (W)	30W		
CURRENT (A)	0.20A		
SPEED (RPM)	1300RPM		
FAN BLADES			
ROTATION	CCW (looking towards the shaft)		
AIRFLOW DIRECTION	Sucking or Blowing		
MOTOR PROTECTION	Impedance protected		
INSULATION CLASS	B		
TEMPERATURE RISE	75°C max (with load)		
PROTECTION CLASS	IP 42		
OPERATING TYPE	S1		
MOUNTING TYPE	Horizontal or Vertical		
AMBIENT TEMPERATURE	-40°C +40°C		
BEARINGS	Sleeve bearings		
LUBRICATING OIL	PERMAWICK 284#		
ELECTRICAL CONNECTION	VDE 3× 0.3mm² lead wire 1000-1020mm free length		
HI-POT TEST	1800V 1S		
RING			
GRID			
BRACKER TYPE			
APPROVALS	CE		
WEIGHT PER UNIT	0.75kg		
PACKING	24PCS/CTN		
P/N	051322001-4Q		

WIRE CONNECT

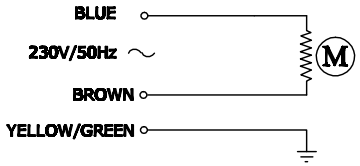

LABLE

MTF521RF
230V 50Hz 5/30W 0.20A
1300/1550r/min CL.B

				DECIMAL	TOLERANCE		SIGN	DATE
				X	±0.5	DRN.BY		
				X.X	±0.25	CHD.BY		
				X.XX	±0.15	ENG.BY		
REV.	DESCRIPTION	APPROVED	DATE	ANGLE	±3°	APP.BY		

TITLE

FAN MOTOR 5W

PROJECTION

A4

SCALE:

SHEET: of