FILE NO	162522001-4Q

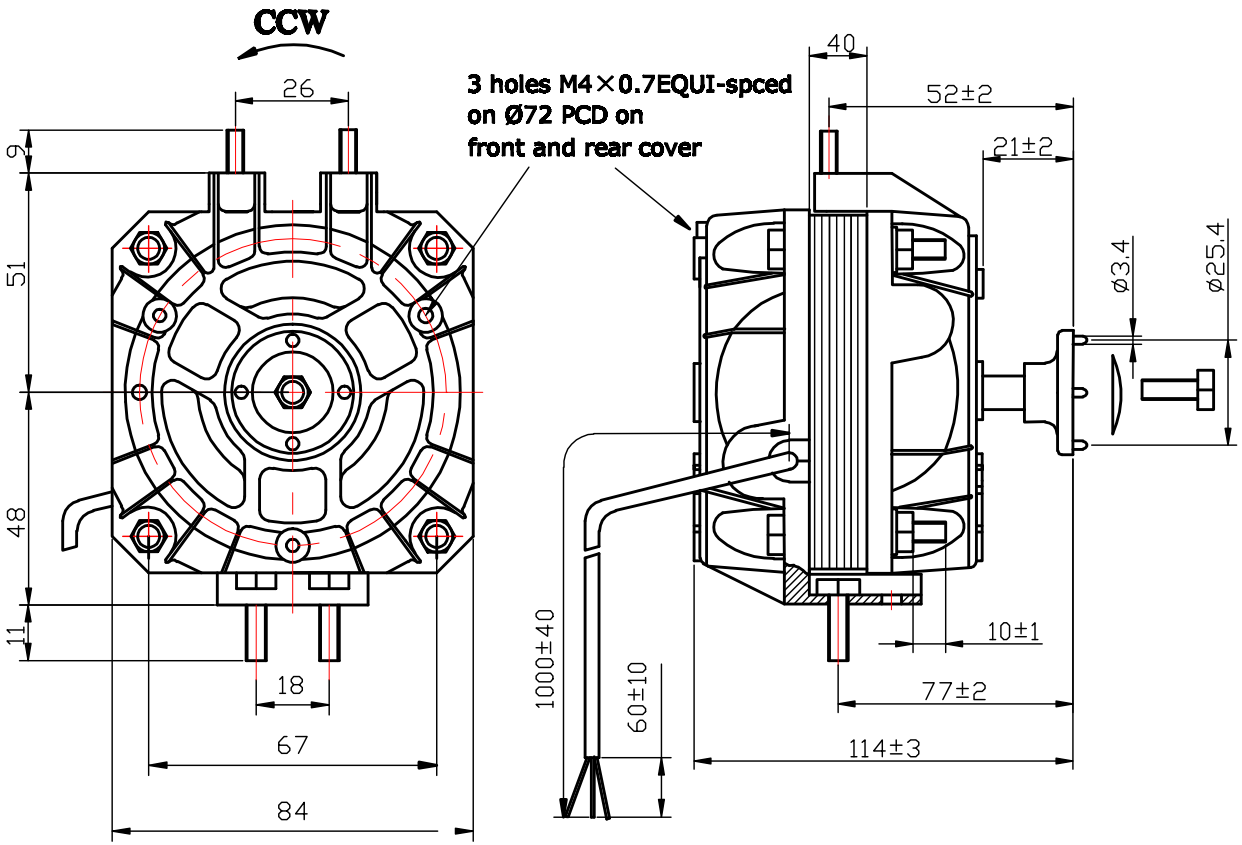

SPECIFICATION

MOTOR	Shaded pole motor		
MOTOR TYPE	MTF525RF		
VOLTAGE (V)	230		
FREQUENCY (Hz)	50		
INPUT POWER (W)	95W		
CURRENT (A)	0.65A		
SPEED (RPM)	1300RPM		
FAN BLADES			
ROTATION	CCW (looking towards the shaft)		
AIRFLOW DIRECTION	Sucking or Blowing		
MOTOR PROTECTION	Impedance protected		
INSULATION CLASS	B		
TEMPERATURE RISE	75°C max (with load)		
PROTECTION CLASS	IP 42		
OPERATING TYPE	S1		
MOUNTING TYPE	Horizontal or Vertical		
AMBIENT TEMPERATURE	-40°C +40°C		
BEARINGS	Sleeve bearings		
LUBRICATING OIL	PERMAWICK 284#		
ELECTRICAL CONNECTION	VDE 3× 0.3mm² lead wire 1000-1020mm free length		
HI-POT TEST	1800V 1S		
RING			
GRID			
BRACKER TYPE			
APPROVALS	CE		
WEIGHT PER UNIT	1.75kg		
PACKING	12PCS/CTN		
P/N			

WIRE CONNECT

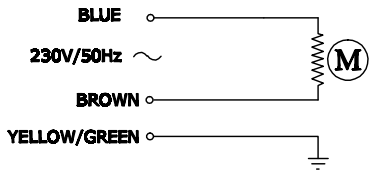

LABLE

MTF525RF
230V 50Hz 25/95W 0.65A
1300/1550r/min CL.B

REV.	DESCRIPTION	APPROVED	DATE	DECIMAL	TOLERANCE		SIGN	DATE
				X	±0.5	DRN.BY		
				X.X	±0.25	CHD.BY		
				X.XX	±0.15	ENG.BY		
				ANGLE	±3°	APP.BY		

TITLE: FAN MOTOR 25W

PROJECTION

A4

SCALE:

SHEET: of