Model

Designation	**SC15GH**	**220-240V/50Hz 1~**	**220-240V/60Hz 1~**	Sales code:	**104G8561**

Compressor design

Oil type	Polyolester	Refrigerant(s)	**R134a, R513A**
Oil viscosity	22cST	Displacement	15,28cm³ / 0,93cu.in
Oil quantity	500cm³ / 16,9fl.oz	Compressors on pallet	80
Refr. charge - tech. limit	1300g / 45,9oz		
Free gas volume comp.	1410cm³ / 47,7fl.oz		
Weight	13kg / 28,7lbs		
Motor protection	1# internal		
Winding resistance main	4,4Ω (at 25°C)		
Winding resistance aux	14Ω (at 25°C)		
Max. winding temp.	125°C / 257°F		
Max. discharge temp.	130°C / 266°F		

General - Configurations with SC15GH

	Conf. 1	**Conf. 2**	**Conf. 3**	**Conf. 4**
Motorconfiguration	CSIR	CSIR	CSIR	CSIR
Power supply (nominal)	220-240V/50Hz	220-240V/50Hz	208-230V/60Hz	208-230V/60Hz
Number of phases	1	1	1	1
Voltage range	198-254V	198-254V	198-254V	198-254V
Approvals	VDE, UL, CCC, KC	VDE, UL, CCC	VDE, UL, CCC, KC	VDE, UL, CCC
Starting torque	HST	HST	HST	HST
Note	- / -			

Applications with SC15GH

	Conf. 1	**Conf. 2**	**Conf. 3**	**Conf. 4**
Refrigerant	R134a	R513A	R134a	R513A
Application	HBP	HBP	HBP	HBP
System cooling	fan 3m/s	fan 3m/s	fan 3m/s	fan 3m/s
Hot gas defrost	OK	OK	OK	OK
Long interval pull down	OK	OK	OK	OK

Electrical data - Configurations with SC15GH

	Conf. 1	**Conf. 2**	**Conf. 3**	**Conf. 4**
Starting device type	relay	relay	relay	relay
Run capacitor	-/-	-/-	-/-	-/-
Start capacitor	80µF	80µF	80µF	80µF
LRA (locked rotor amps / 4s)	19A	19A	18,3A	18,3A
RLA (rated load amps / 1s)	3,9A	3,9A	3,52A	3,52A
Cut in current	19A	19A	18,3A	18,3A
IP class	21	21	21	21

Model

Designation			Sales code:
	SC15GH	**220-240V/50Hz 1~ 220-240V/60Hz 1~**	**104G8561**

Compressor dimensions

Housing		
	A Height	209mm / 8,23in
	B Height	203mm / 7,99in
	C Length shell	218mm / 8,58in
	D Length w. cover	255mm / 10,04in
	E Width	151mm / 5,94in

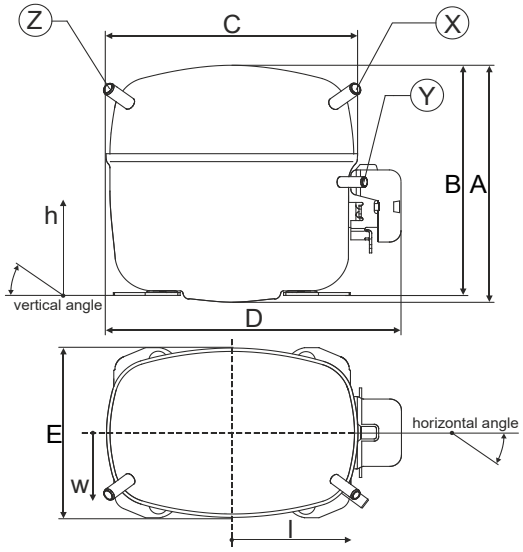

Connectors		**Suction X**	**Discharge Y**	**Process Z**
Diameter	[mm]	øi 10,11-10,29	øi 8,11-8,29	øi 6,11-6,29
(i:inside, o:outside)	[in]	øi 0,4-0,41	øi 0,32-0,33	øi 0,24-0,25
Material		copper	copper	copper
Horizontal angle	±2°	37°	37°	143°
Vertical angle	±2°	30°	0°	150°
Position l/h/w	[mm]	107/183/55	115/100/63	-107/183/55
	[in]	4,2/7,2/2,2	4,5/3,9/2,5	-4,2/7,2/2,2
Straight tube l.	[mm]	12	12	12
	[in]	0,5	0,5	0,5

Compressor fixation

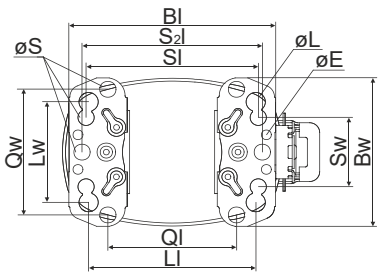

Baseplate	[mm]	[inch]
Bl	204	8.03
Bw	150	5.9
øE	ø 9.7	ø 0.38

Large holes	[mm]	[inch]
Ll	165	6.5
Lw	101.6	4
øL	ø 19	ø 0.75

Small holes	[mm]	[inch]
Sl	170	6.7
Sw	70	2.76
øS	ø 16	ø 0.63
Ql	127	5
Qw	127	5

Bolt joint

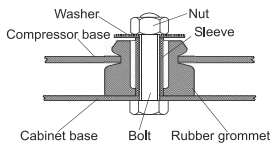

Snap-on

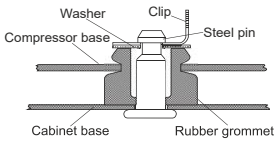

Mounting accessories	one comp.	multi pack
Bolt joint | M6 | ø16mm	118-1917	118-1918
Bolt joint | ø1/4" | ø16mm	118-1946	
Bolt joint | ø1/4" | ø19mm	118-1949	
Snap-on | ø7,3 | ø16mm	118-1947	118-1919

Model

Designation	SC15GH	220-240V/50Hz	Conf. 1	Sales code:	104G8561

Configuration

Motorconfiguration	CSIR
Power supply (nominal)	220-240V/50Hz 1~
Refrigerant	R134a
Application	HBP
Voltage range	198-254V
Starting torque	HST
Approvals	VDE
	UL
	CCC
	KC

Electrical accessories / wiring diagram

CSIR

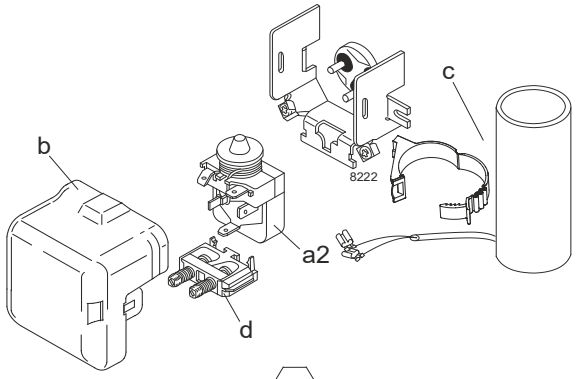

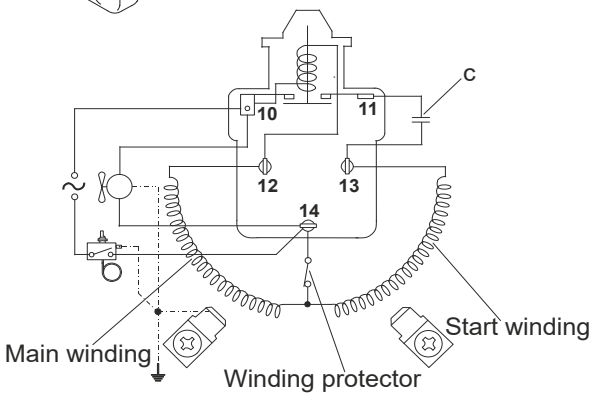

Components

a2	relay	117U6011
c	start capacitor (80µF)	117U5017
d	cord relief	103N1004
b	plastic cover	103N2008

Ambient temperatures / system cooling

Ambient temperature min.:	10°C / 50°F
Ambient temperature max.:	43°C / 110°F

System cooling (n/a: outside limits)

T ambient	LBP	MBP	HBP
32°C / 90°F	n/a	n/a	fan 3m/s
38°C / 100°F	n/a	n/a	fan 3m/s
43°C / 110°F	n/a	n/a	fan 3m/s

Operation pressure range

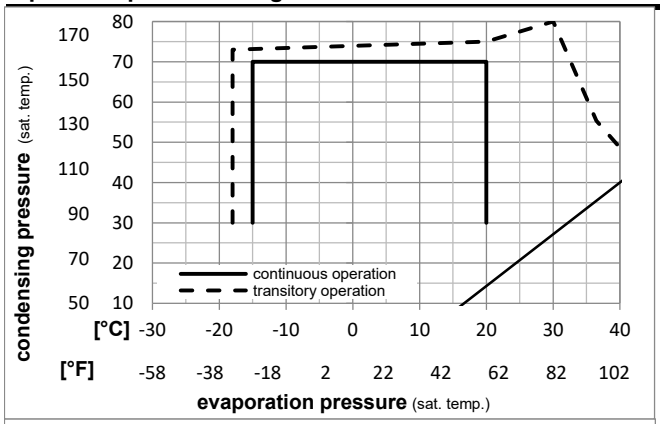

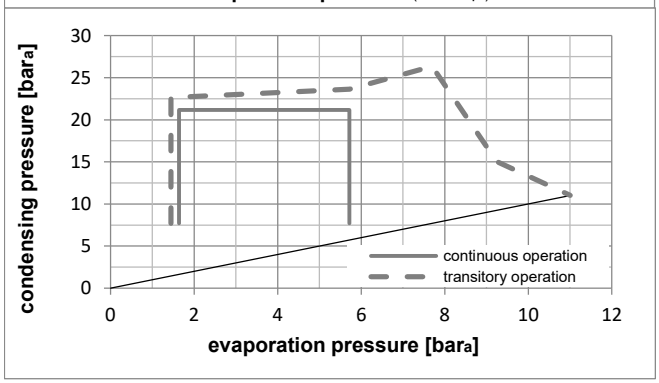

Model

Designation **SC15GH** **220-240V/50Hz** **Conf. 1** Sales code: **104G8561**

Optimization + standard conditions 220V/50Hz, CSIR, fan 3m/s, VDE, UL, CCC, KC

	Evaporating pressure (saturation temperature) pe	Condensing pressure (saturation temperature) pc	Return gas temp. RGT	Liquid temp. Tliq	Cooling capacity [W]	[Btu/h]	[kcal/h]	COP [W/W]	EER [Btu/Wh]	[kcal/Wh]	Power consumption P1 [W]	Current consumption I [A]	Ref. mass flow ṁ [kg/h]	
[°C]	7,22	54,4	35	46,1	1387,1	4737	1193,7	2,41	8,21	2,07	576,7	3,20	30,77	**ASHRAE HBP**
[°F]	45	130	95	115										
[°C]	5	55	32	55	1139,1	3890	980,3	2,02	6,89	1,74	564,9	3,14	28,07	**cecomaf HBP**
[°F]	41	131	89,6	131										
[°C]	5	50	20	50	1182,5	4039	1017,7	2,19	7,48	1,88	540,0	3,03	29,80	**EN12900 HBP**
[°F]	41	122	68	122										
[°C]	-6,66	54,4	35	46,1	738,1	2521	635,2	1,60	5,48	1,38	460,1	2,67	16,10	**ASHRAE MBP**
[°F]	20	130	95	115										
[°C]	-10	55	32	55	558,6	1908	480,7	1,32	4,50	1,13	423,9	2,50	13,51	**cecomaf MBP**
[°F]	14	131	89,6	131										
[°C]	-10	45	20	45	647,1	2210	556,9	1,58	5,40	1,36	409,1	2,44	15,15	**EN12900 MBP**
[°F]	14	113	68	113										

Performance tables 220V/50Hz, CSIR, fan 3m/s, VDE, UL, CCC, KC

	pe [°C]	[°F]	Cooling capacity [W]	[Btu/h]	[kcal/h]	COP [W/W]	EER [Btu/Wh]	[kcal/Wh]	P1 [W]	I [A]	m [kg/h]
[°C / °F]	-15	5	510,8	1744	439,6	1,42	4,85	1,22	359,4	2,21	11,13
cond. pressure	-10	14	671,4	2293	577,8	1,64	5,60	1,41	409,1	2,44	14,69
pc= 45/113	-5	23	859,7	2936	739,9	1,90	6,50	1,64	451,7	2,63	18,91
return gas temp.	0	32	1080,1	3689	929,6	2,22	7,58	1,91	486,8	2,79	23,89
RGT= 32/90	5	41	1336,7	4565	1150,3	2,60	8,88	2,24	514,2	2,91	29,76
liquid temp	15	59	1975,0	6745	1699,7	3,63	12,39	3,12	544,3	3,05	44,74
Tliq= 45/113	20	68	2365,2	8078	2035,5	4,33	14,79	3,73	546,2	3,06	54,17
[°C / °F]	-15	5	416,9	1424	358,8	1,15	3,93	0,99	362,2	2,22	10,04
cond. pressure	-10	14	558,6	1908	480,7	1,32	4,50	1,13	423,9	2,50	13,51
pc= 55/131	-5	23	723,4	2470	622,5	1,51	5,16	1,30	478,5	2,75	17,58
return gas temp	0	32	915,5	3126	787,9	1,74	5,95	1,50	525,6	2,96	22,39
RGT= 32/90	5	41	1139,1	3890	980,3	2,02	6,89	1,74	564,9	3,14	28,07
liquid temp	15	59	1697,6	5798	1461,0	2,75	9,38	2,36	618,4	3,39	42,64
Tliq= 55/131	20	68	2040,9	6970	1756,4	3,23	11,03	2,78	631,9	3,45	51,90

Model

Designation	SC15GH	220-240V/50Hz	Conf. 2	Sales code:	104G8561

Configuration

Motorconfiguration	CSIR
Power supply (nominal)	220-240V/50Hz 1~
Refrigerant	R513A
Application	HBP
Voltage range	198-254V
Starting torque	HST
Approvals	VDE
	UL
	CCC

Electrical accessories / wiring diagram

CSIR

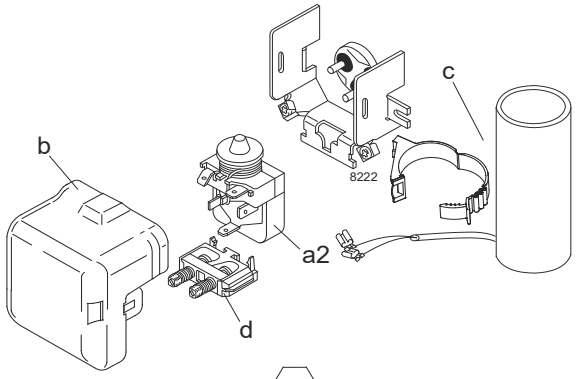

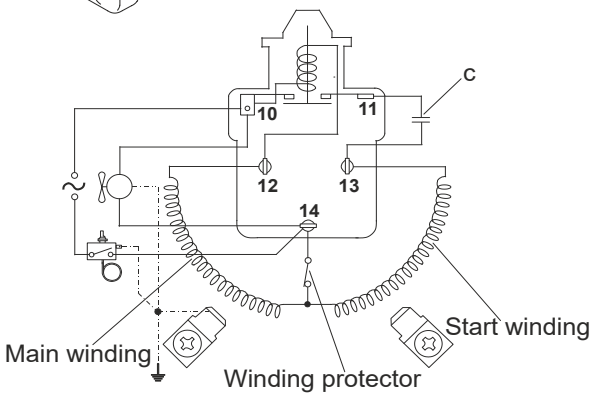

Components

a2	relay	117U6011
c	start capacitor (80µF)	117U5017
d	cord relief	103N1004
b	plastic cover	103N2008

Ambient temperatures / system cooling

Ambient temperature min.:	10°C / 50°F
Ambient temperature max.:	43°C / 110°F

System cooling (n/a: outside limits)

T ambient	LBP	MBP	HBP
32°C / 90°F	n/a	n/a	fan 3m/s
38°C / 100°F	n/a	n/a	fan 3m/s
43°C / 110°F	n/a	n/a	fan 3m/s

Operation pressure range

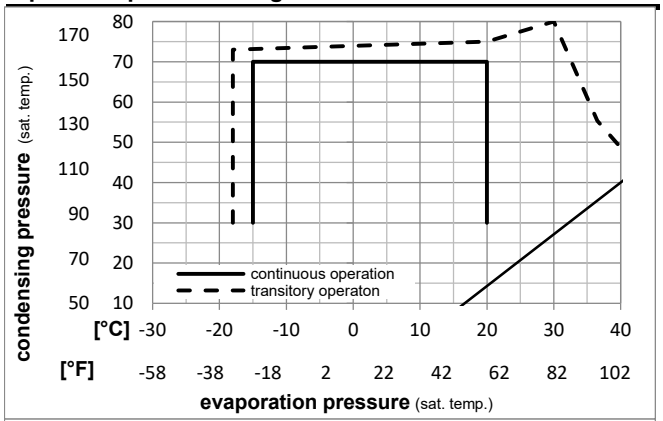

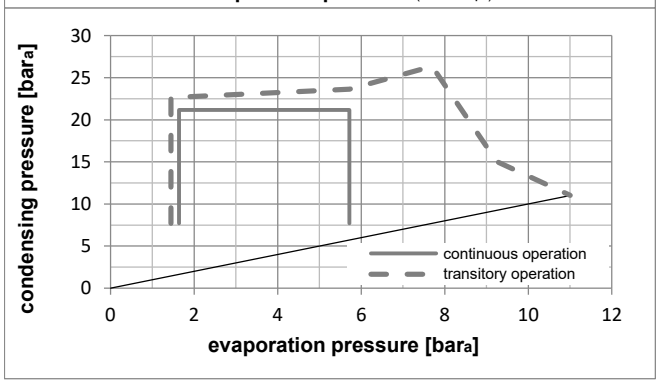

Model

Designation **SC15GH** **220-240V/50Hz** **Conf. 2** Sales code: **104G8561**

Optimization + standard conditions 220V/50Hz, CSIR, fan 3m/s, VDE, UL, CCC

	Evaporating pressure (saturation temperature) pe	Condensing pressure (saturation temperature) pc	Return gas temp. RGT	Liquid temp. Tliq	Cooling capacity [W]	[Btu/h]	[kcal/h]	COP [W/W]	EER [Btu/Wh]	[kcal/Wh]	Power consumption P1 [W]	Current consumption I [A]	Ref. mass flow ṁ [kg/h]	
[°C]	7,22	54,4	35	46,1	1427,0	4873	1228,1	2,37	8,10	2,04	601,9	3,29	35,45	**ASHRAE HBP**
[°F]	45	130	95	115										
[°C]	5	55	32	55	1154,7	3944	993,8	1,95	6,67	1,68	590,9	3,24	32,45	**cecomaf HBP**
[°F]	41	131	89,6	131										
[°C]	5	50	20	50	1200,8	4101	1033,4	2,13	7,26	1,83	564,6	3,12	34,43	**EN12900 HBP**
[°F]	41	122	68	122										
[°C]	-6,66	54,4	35	46,1	776,0	2650	667,8	1,59	5,44	1,37	487,4	2,77	19,01	**ASHRAE MBP**
[°F]	20	130	95	115										
[°C]	-10	55	32	55	580,7	1983	499,8	1,29	4,40	1,11	450,9	2,61	16,06	**cecomaf MBP**
[°F]	14	131	89,6	131										
[°C]	-10	45	20	45	677,2	2313	582,8	1,56	5,33	1,34	434,0	2,53	17,95	**EN12900 MBP**
[°F]	14	113	68	113										

Performance tables 220V/50Hz, CSIR, fan 3m/s, VDE, UL, CCC

	pe [°C]	[°F]	Cooling capacity [W]	[Btu/h]	[kcal/h]	COP [W/W]	EER [Btu/Wh]	[kcal/Wh]	P1 [W]	I [A]	m [kg/h]
[°C / °F]	-15	5	544,2	1859	468,4	1,42	4,85	1,22	383,1	2,30	13,33
cond. pressure	-10	14	708,2	2419	609,5	1,63	5,57	1,40	434,0	2,53	17,41
pc= 45/113	-5	23	899,1	3071	773,8	1,89	6,44	1,62	476,7	2,72	22,19
return gas temp.	0	32	1121,0	3828	964,8	2,19	7,49	1,89	511,3	2,88	27,80
RGT= 32/90	5	41	1377,9	4706	1185,9	2,56	8,76	2,21	537,4	3,00	34,37
liquid temp	15	59	2012,8	6874	1732,3	3,57	12,19	3,07	563,8	3,12	50,93
Tliq= 45/113	20	68	2398,9	8193	2064,5	4,25	14,53	3,66	563,9	3,12	61,25
[°C / °F]	-15	5	438,6	1498	377,4	1,13	3,86	0,97	387,5	2,32	12,08
cond. pressure	-10	14	580,7	1983	499,8	1,29	4,40	1,11	450,9	2,61	16,06
pc= 55/131	-5	23	744,8	2544	641,0	1,47	5,03	1,27	506,1	2,86	20,69
return gas temp	0	32	934,8	3192	804,5	1,69	5,78	1,46	552,8	3,07	26,10
RGT= 32/90	5	41	1154,7	3944	993,8	1,95	6,67	1,68	590,9	3,24	32,45
liquid temp	15	59	1700,5	5808	1463,5	2,65	9,06	2,28	641,0	3,46	48,56
Tliq= 55/131	20	68	2034,4	6948	1750,8	3,12	10,65	2,68	652,6	3,51	58,70

Model

Designation	SC15GH	208-230V/60Hz	Conf. 3	Sales code:	104G8561

Configuration

Motorconfiguration	CSIR
Power supply (nominal)	208-230V/60Hz 1~
Refrigerant	R134a
Application	HBP
Voltage range	198-254V
Starting torque	HST
Approvals	VDE
	UL
	CCC
	KC

Ambient temperatures / system cooling

Ambient temperature min.:	10°C / 50°F
Ambient temperature max.:	43°C / 110°F

System cooling (n/a: outside limits)

T ambient	LBP	MBP	HBP
32°C / 90°F	n/a	n/a	fan 3m/s
38°C / 100°F	n/a	n/a	fan 3m/s
43°C / 110°F	n/a	n/a	fan 3m/s

Operation pressure range

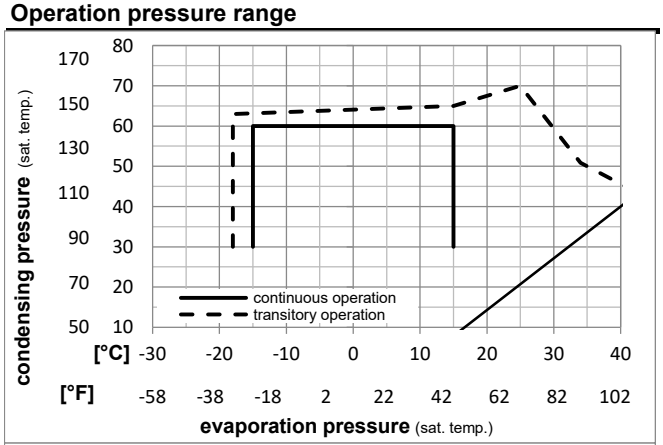

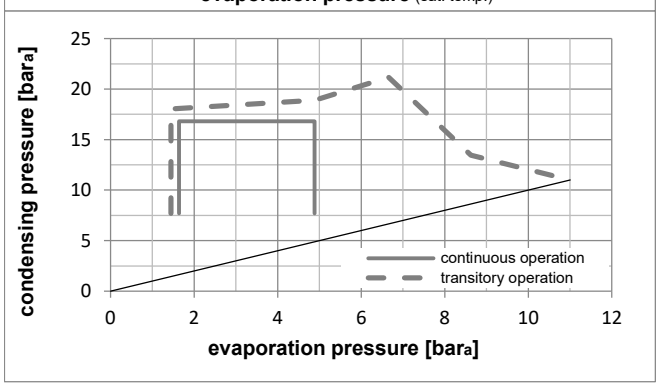

Electrical accessories / wiring diagram

CSIR

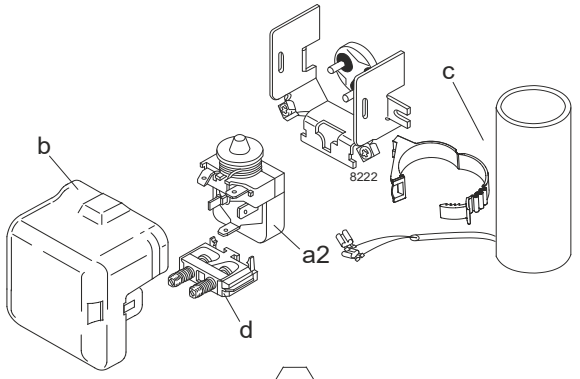

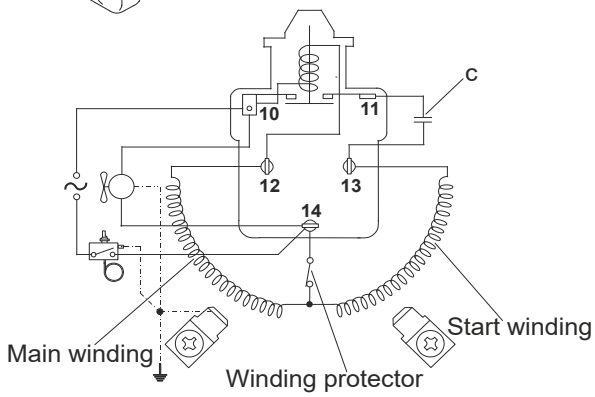

Components

a2	relay	117U6011
c	start capacitor (80µF)	117U5017
d	cord relief	103N1004
b	plastic cover	103N2008

Model

Designation **SC15GH** **208-230V/60Hz** **Conf. 3** Sales code: **104G8561**

Optimization + standard conditions 220V/60Hz, CSIR, fan 3m/s, VDE, UL, CCC, KC

	Evaporating pressure (saturation temperature) pe	Condensing pressure (saturation temperature) pc	Return gas temp. RGT	Liquid temp. Tliq	Cooling capacity [W]	[Btu/h]	[kcal/h]	COP [W/W]	EER [Btu/Wh]	[kcal/Wh]	Power consumption P1 [W]	Current consumption I [A]	Ref. mass flow ṁ [kg/h]	
[°C]	7,22	54,4	35	46,1	1595,4	5449	1373,0	2,39	8,17	2,06	667,1	3,28	35,39	**ASHRAE HBP**
[°F]	45	130	95	115										
[°C]	5	55	32	55	1295,1	4423	1114,6	2,03	6,92	1,74	639,0	3,13	31,91	**cecomaf HBP**
[°F]	41	131	89,6	131										
[°C]	5	50	20	50	1349,4	4608	1161,3	2,21	7,56	1,91	609,3	2,97	34,00	**EN12900 HBP**
[°F]	41	122	68	122										
[°C]	-6,66	54,4	35	46,1	783,1	2675	674,0	1,67	5,70	1,44	469,3	2,25	17,09	**ASHRAE MBP**
[°F]	20	130	95	115										
[°C]	-10	55	32	55	581,5	1986	500,5	1,37	4,69	1,18	423,6	2,01	14,06	**cecomaf MBP**
[°F]	14	131	89,6	131										
[°C]	-10	45	20	45	677,9	2315	583,4	1,64	5,59	1,41	414,0	1,96	15,87	**EN12900 MBP**
[°F]	14	113	68	113										

Performance tables 220V/60Hz, CSIR, fan 3m/s, VDE, UL, CCC, KC

	pe [°C]	[°F]	Cooling capacity [W]	[Btu/h]	[kcal/h]	COP [W/W]	EER [Btu/Wh]	[kcal/Wh]	P1 [W]	I [A]	m [kg/h]
[°C / °F]	-15	5	512,6	1751	441,1	1,44	4,91	1,24	356,5	1,66	11,17
cond. pressure	-10	14	703,3	2402	605,2	1,70	5,80	1,46	414,0	1,96	15,39
pc= 45/113	-5	23	934,2	3190	804,0	1,98	6,77	1,71	471,5	2,26	20,54
return gas temp.	0	32	1209,9	4132	1041,3	2,29	7,83	1,97	528,0	2,55	26,76
RGT= 32/90	5	41	1535,2	5243	1321,2	2,63	9,00	2,27	582,8	2,84	34,18
liquid temp	10	50	1914,6	6539	1647,7	3,02	10,30	2,60	634,9	3,11	42,96
Tliq= 45/113	15	59	2352,7	8035	2024,7	3,44	11,76	2,96	683,5	3,36	53,29
[°C / °F]	-15	5	424,6	1450	365,4	1,20	4,08	1,03	355,0	1,65	10,22
cond. pressure	-10	14	581,5	1986	500,5	1,37	4,69	1,18	423,6	2,01	14,06
pc= 55/131	-5	23	775,9	2650	667,7	1,57	5,36	1,35	494,4	2,38	18,86
return gas temp	0	32	1012,2	3457	871,1	1,79	6,10	1,54	566,5	2,75	24,76
RGT= 32/90	5	41	1295,1	4423	1114,6	2,03	6,92	1,74	639,0	3,13	31,91
liquid temp	10	50	1629,4	5565	1402,2	2,29	7,83	1,97	711,0	3,50	40,50
Tliq= 55/131	15	59	2019,5	6897	1738,0	2,58	8,82	2,22	781,6	3,87	50,72

Model

Designation	SC15GH	208-230V/60Hz	Conf. 4	Sales code:	104G8561

Configuration

Motorconfiguration	CSIR
Power supply (nominal)	208-230V/60Hz 1~
Refrigerant	R513A
Application	HBP
Voltage range	198-254V
Starting torque	HST
Approvals	VDE
	UL
	CCC

Electrical accessories / wiring diagram

CSIR

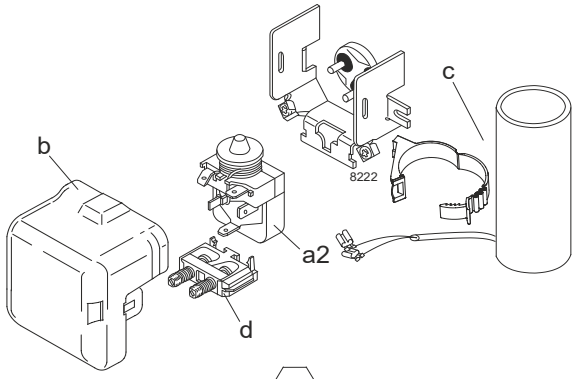

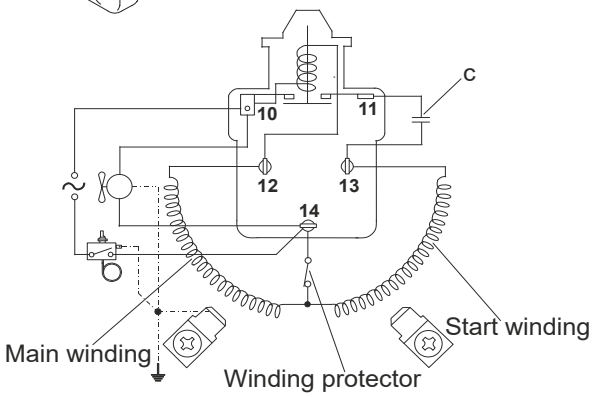

Components

a2	relay	117U6011
c	start capacitor (80µF)	117U5017
d	cord relief	103N1004
b	plastic cover	103N2008

Ambient temperatures / system cooling

Ambient temperature min.:	10°C / 50°F
Ambient temperature max.:	43°C / 110°F

System cooling (n/a: outside limits)

T ambient	LBP	MBP	HBP
32°C / 90°F	n/a	n/a	fan 3m/s
38°C / 100°F	n/a	n/a	fan 3m/s
43°C / 110°F	n/a	n/a	fan 3m/s

Operation pressure range

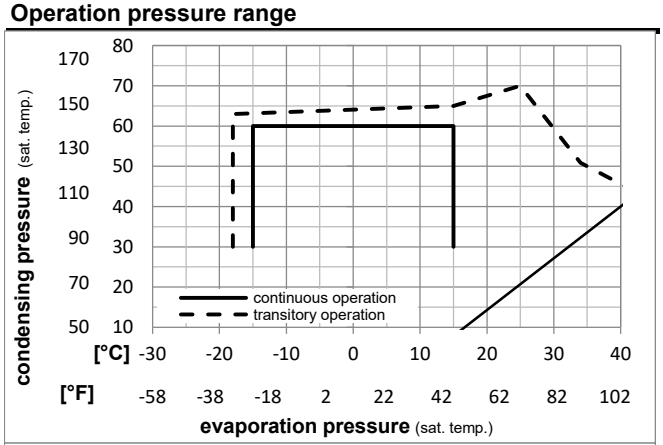

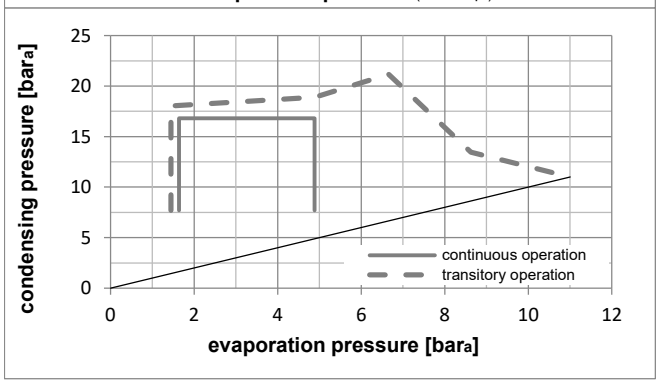

Model

Designation **SC15GH 208-230V/60Hz** **Conf. 4** Sales code: **104G8561**

Optimization + standard conditions 220V/60Hz, CSIR, fan 3m/s, VDE, UL, CCC

	Evaporating pressure (saturation temperature) pe	Condensing pressure (saturation temperature) pc	Return gas temp. RGT	Liquid temp. Tliq	Cooling capacity [W]	[Btu/h]	[kcal/h]	COP [W/W]	EER [Btu/Wh]	[kcal/Wh]	Power consumption P1 [W]	Current consumption I [A]	Ref. mass flow ṁ [kg/h]	
[°C]	7,22	54,4	35	46,1	1641,7	5607	1412,8	2,36	8,05	2,03	696,4	3,42	40,78	**ASHRAE HBP**
[°F]	45	130	95	115										
[°C]	5	55	32	55	1313,2	4485	1130,2	1,96	6,71	1,69	668,4	3,28	36,90	**cecomaf HBP**
[°F]	41	131	89,6	131										
[°C]	5	50	20	50	1370,6	4681	1179,5	2,15	7,35	1,85	637,0	3,11	39,30	**EN12900 HBP**
[°F]	41	122	68	122										
[°C]	-6,66	54,4	35	46,1	823,7	2813	708,9	1,66	5,66	1,43	496,8	2,38	20,18	**ASHRAE MBP**
[°F]	20	130	95	115										
[°C]	-10	55	32	55	604,8	2066	520,5	1,34	4,59	1,16	450,3	2,14	16,72	**cecomaf MBP**
[°F]	14	131	89,6	131										
[°C]	-10	45	20	45	709,7	2424	610,8	1,62	5,52	1,39	439,0	2,08	18,81	**EN12900 MBP**
[°F]	14	113	68	113										

Performance tables 220V/60Hz, CSIR, fan 3m/s, VDE, UL, CCC

	pe [°C]	[°F]	Cooling capacity [W]	[Btu/h]	[kcal/h]	COP [W/W]	EER [Btu/Wh]	[kcal/Wh]	P1 [W]	I [A]	m [kg/h]
[°C / °F]	-15	5	546,5	1866	470,3	1,44	4,91	1,24	380,1	1,78	13,39
cond. pressure	-10	14	742,1	2535	638,7	1,69	5,77	1,45	439,0	2,08	18,25
pc= 45/113	-5	23	977,2	3337	841,0	1,96	6,71	1,69	497,4	2,39	24,12
return gas temp.	0	32	1256,0	4290	1081,0	2,27	7,74	1,95	554,3	2,68	31,15
RGT= 32/90	5	41	1582,9	5406	1362,2	2,60	8,87	2,24	609,1	2,97	39,48
liquid temp	10	50	1962,0	6700	1688,5	2,97	10,14	2,55	661,0	3,24	49,26
Tliq= 45/113	15	59	2397,7	8188	2063,5	3,38	11,55	2,91	709,1	3,49	60,66
[°C / °F]	-15	5	446,5	1525	384,3	1,18	4,02	1,01	379,7	1,77	12,30
cond. pressure	-10	14	604,8	2066	520,5	1,34	4,59	1,16	450,3	2,14	16,72
pc= 55/131	-5	23	799,2	2729	687,8	1,53	5,22	1,32	522,4	2,52	22,20
return gas temp	0	32	1033,9	3531	889,8	1,74	5,93	1,49	595,4	2,90	28,87
RGT= 32/90	5	41	1313,2	4485	1130,2	1,96	6,71	1,69	668,4	3,28	36,90
liquid temp	10	50	1641,5	5606	1412,7	2,22	7,57	1,91	740,6	3,65	46,47
Tliq= 55/131	15	59	2023,0	6909	1741,0	2,49	8,52	2,15	811,4	4,02	57,77